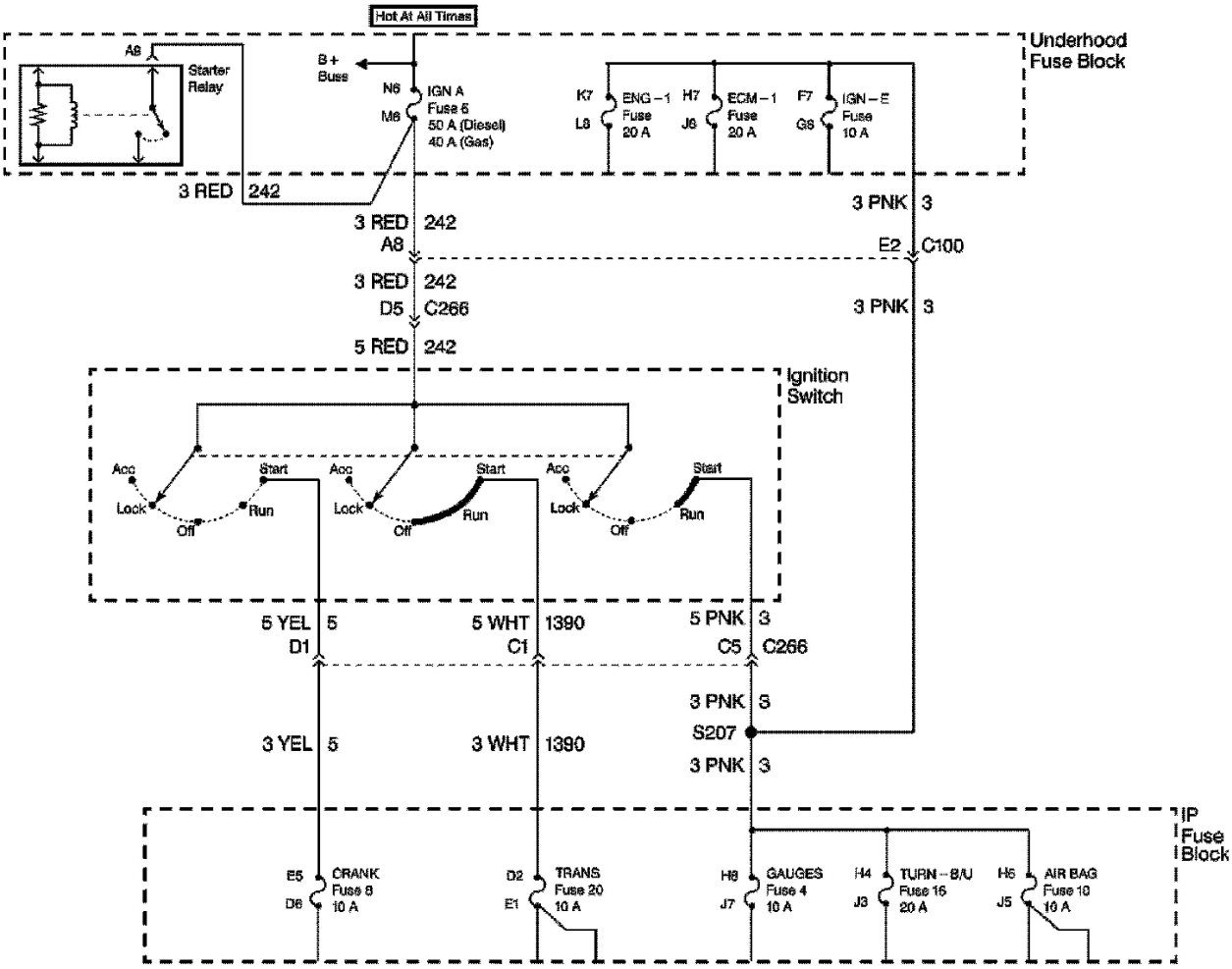
Hot At All Times
Underhood Fuse Block
A8
Starter Relay
B+ Buss
N6
M6
IGN A Fuse 6 50 A (Diesel) 40 A (Gas)
K7
L8
ENG – 1 Fuse 20 A
H7
J6
ECM – 1 Fuse 20 A
F7
G8
IGN – E Fuse 10 A
3 RED 242
3 RED 242
A8
3 RED 242
D5 C266
5 RED 242
3 PNK 3
E2 C100
3 PNK 3
Ignition Switch
Acc
Start
Lock
Off
Run
5 YEL 5
D1
5 WHT 1390
C1
5 PNK 3
C5 C266
3 PNK 3
S207
3 PNK 3
3 YEL 5
3 WHT 1390
IP Fuse Block
E5
D6
CRANK Fuse 8 10 A
D2
E1
TRANS Fuse 20 10 A
H8
J7
GAUGES Fuse 4 10 A
H4
J3
TURN – B/U Fuse 16 20 A
H5
J5
AIR BAG Fuse 10 10 A