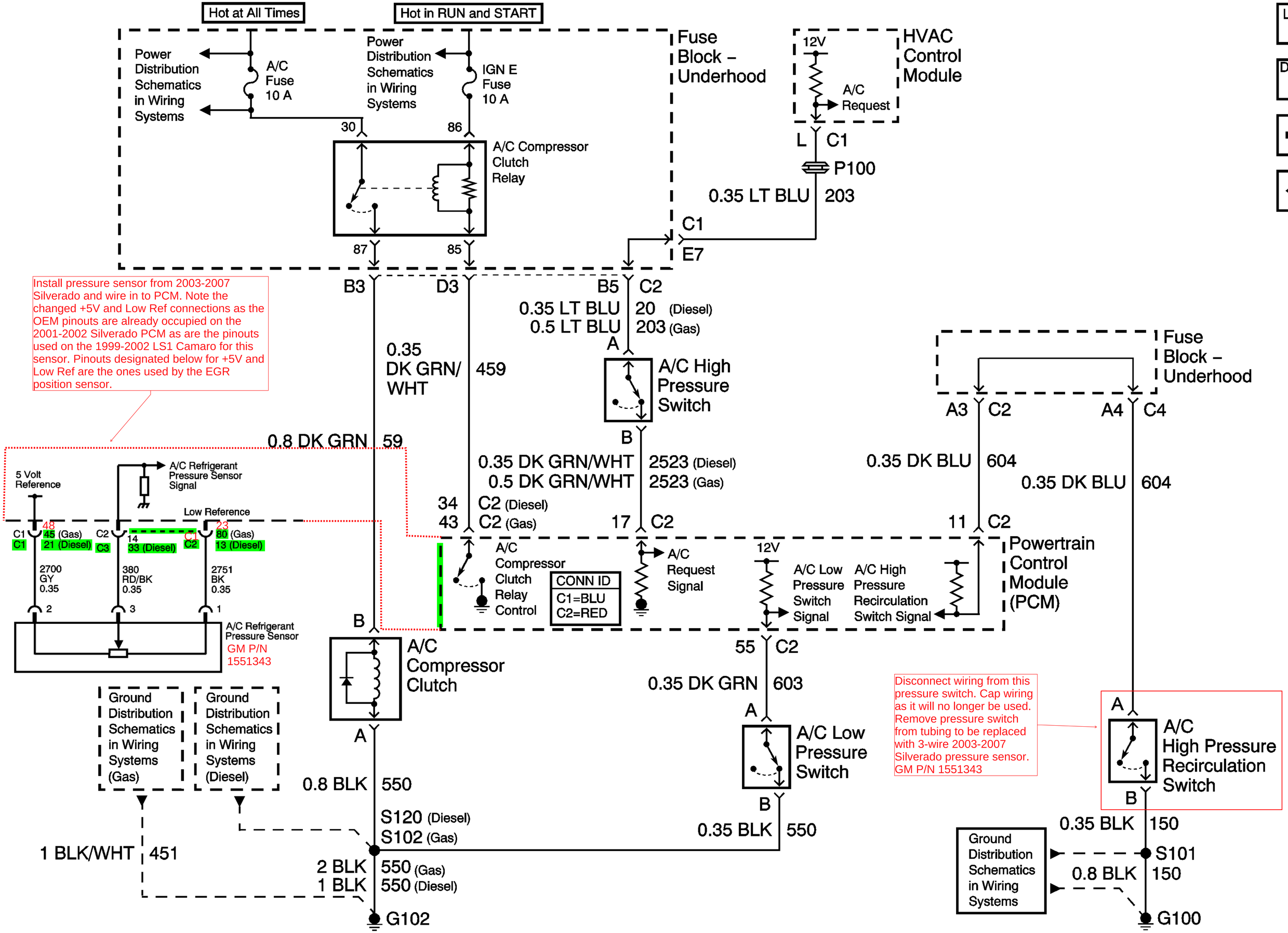
Hot at All Times
Hot in RUN and START
Power Distribution Schematics in Wiring Systems
A/C Fuse 10 A
Power Distribution Schematics in Wiring Systems
IGN E Fuse 10 A
30
86
A/C Compressor Clutch Relay
87
85
Fuse Block – Underhood
12V
A/C Request
HVAC Control Module
L
C1
P100
0.35 LT BLU
203
C1
E7
Install pressure sensor from 2003-2007 Silverado and wire in to PCM. Note the changed +5V and Low Ref connections as the OEM pinouts are already occupied on the 2001-2002 Silverado PCM as are the pinouts used on the 1999-2002 LS1 Camaro for this sensor. Pinouts designated below for +5V and Low Ref are the ones used by the EGR position sensor.
B3
D3
B5
C2
0.35 LT BLU
20 (Diesel)
0.5 LT BLU
203 (Gas)
A
0.35 DK GRN/WHT
459
A/C High Pressure Switch
B
0.8 DK GRN
59
0.35 DK GRN/WHT
2523 (Diesel)
0.5 DK GRN/WHT
2523 (Gas)
Fuse Block – Underhood
A3
C2
A4
C4
0.35 DK BLU
604
0.35 DK BLU
604
5 Volt Reference
A/C Refrigerant Pressure Sensor Signal
Low Reference
C1
48
45 (Gas)
21 (Diesel)
C2
C3
14
33 (Diesel)
C1
C2
23
80 (Gas)
13 (Diesel)
2700 GY 0.35
380 RD/BK 0.35
2751 BK 0.35
2
3
1
A/C Refrigerant Pressure Sensor
GM P/N 1551343
34
43
C2 (Diesel)
C2 (Gas)
17
C2
11
C2
A/C Compressor Clutch Relay Control
CONN ID
C1=BLU
C2=RED
A/C Request Signal
12V
A/C Low Pressure Switch Signal
A/C High Pressure Recirculation Switch Signal
Powertrain Control Module (PCM)
B
A/C Compressor Clutch
55
C2
0.35 DK GRN
603
A
A/C Low Pressure Switch
Disconnect wiring from this pressure switch. Cap wiring as it will no longer be used. Remove pressure switch from tubing to be replaced with 3-wire 2003-2007 Silverado pressure sensor. GM P/N 1551343
A
A/C High Pressure Recirculation Switch
B
Ground Distribution Schematics in Wiring Systems (Gas)
Ground Distribution Schematics in Wiring Systems (Diesel)
A
0.8 BLK
550
B
0.35 BLK
550
S120 (Diesel)
S102 (Gas)
1 BLK/WHT
451
2 BLK
550 (Gas)
1 BLK
550 (Diesel)
G102
0.35 BLK
150
S101
Ground Distribution Schematics in Wiring Systems
0.8 BLK
150
G100